REVISIONS			
REV.	DESCRIPTION	DATE	ECN
A	INITIAL RELEASE	12/31/08	1131

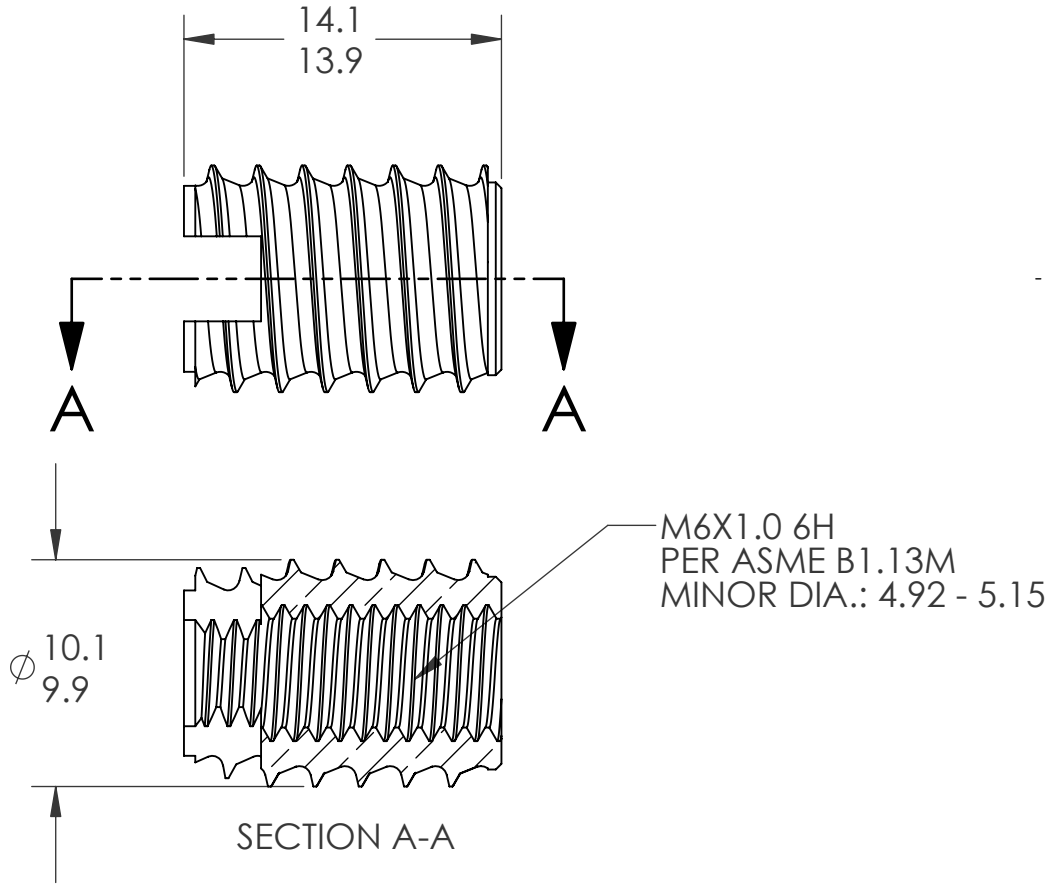

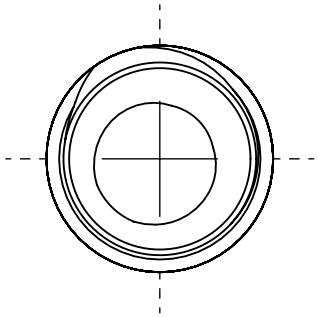

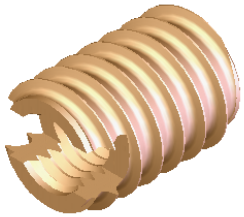

NOTES:

1. REFER TO CATALOG FOR RECOMMENDED BOSS DIMENSIONS

PROPRIETARY AND CONFIDENTIAL

THIS DRAWING, AND THE INFORMATION CONTAINED HERIN, ARE THE PROPERTY OF SHEREX AND ARE NOT TO BE USED IN ANY MANNER DETRIMENT TO THE INTEREST OF THE COMPANY.

SHEREX RESERVES THE RIGHT TO REVISE PART/DRAWING WITHOUT NOTICE.

NEXT ASSY	USED ON
APPLICATION	

UNLESS OTHERWISE SPECIFIED:

DIMENSIONS ARE IN MILLIMETERS
TOLERANCES:

ANGULAR: MACH ±1 BEND ±1
ONE PLACE DECIMAL ±.2
TWO PLACE DECIMAL ±.10

INTERPRET GEOMETRIC TOLERANCING PER: ASME Y14.5M-1994

MATERIAL: BRASS C3604

FINISH: NONE

DO NOT SCALE DRAWING

	NAME	DATE
DRAWN	JVK	12/9/08
CHECKED		
ENG APPR.	JVK	12/9/08
MFG APPR.	TB	12/30/08
Q.A.		

COMMENTS:

E-mail: info@sherex.com
www.sherex.com
Phone: 866-474-3739
Fax: 716-875-0358

TITLE:

M6 THREADSERT

SIZE	DWG. NO.	REV
A	B1T-610-14.0	A

SCALE: 3:1 WEIGHT: kg SHEET 1 OF 1

5 4 3 2 1