REVISIONS			
REV.	DESCRIPTION	DATE	ECN
A	INITIAL RELEASE	5/23/05	
B	NEW FINISH PER SFS-01-001, SC2	1/16/15	1737

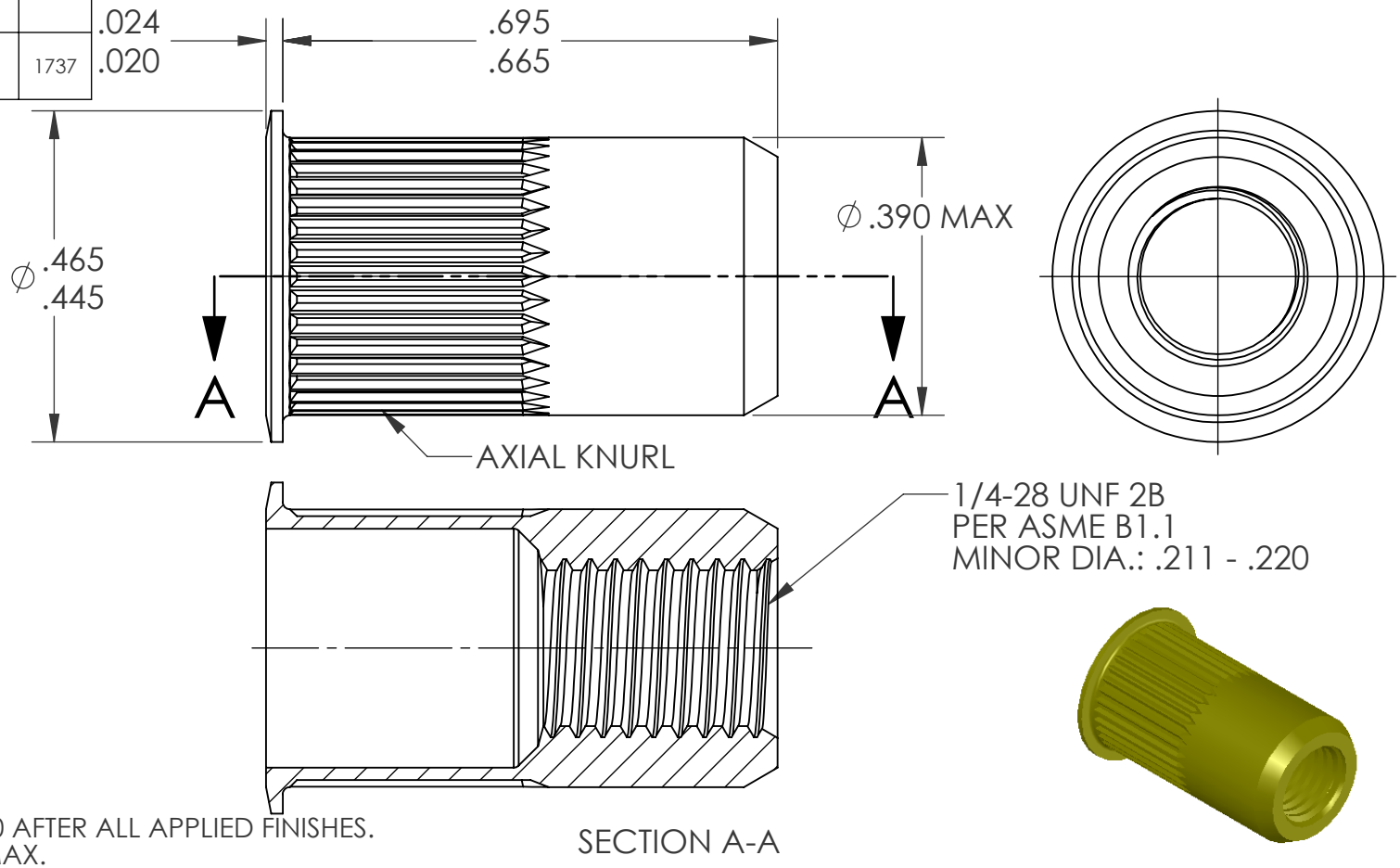

NOTE:
1. GRIP RANGE: .165 - .260
2. HOLE SIZE: .391 +.006/-.000 AFTER ALL APPLIED FINISHES.
3. INSTALLED LENGTH: .380 MAX.
4. LUBRICATION: WAX
5. INSTALLATION TOOL: SSG 802 SPIN SPIN

PROPRIETARY AND CONFIDENTIAL

THIS DRAWING, AND THE INFORMATION CONTAINED HERIN, ARE THE PROPERTY OF SHEREX AND ARE NOT TO BE USED IN ANY MANNER DETRIMENT TO THE INTEREST OF THE COMPANY.

SHEREX SOLUTIONS RESERVES THE RIGHT TO REVISE PART/DRAWING WITHOUT NOTICE.

NEXT ASSY	USED ON
APPLICATION	

UNLESS OTHERWISE SPECIFIED:

DIMENSIONS ARE IN INCHES
TOLERANCES:
ANGULAR: MACH ± 1 BEND ±1
TWO PLACE DECIMAL ±.01
THREE PLACE DECIMAL ±.002

INTERPRET GEOMETRIC TOLERANCING PER: ASME Y14.5M-1994

MATERIAL
C1008/C1010

FINISH
ZINC PLATE W/YELLOW TRIVALENT CHROMATE PER SFS-01-001, SC2

DO NOT SCALE DRAWING

	NAME	DATE
DRAWN	TOO	5/23/05
CHECKED		
ENG APPR.	TOO	5/23/05
MFG APPR.	AJP	5/23/05
Q.A.		

COMMENTS:
E-mail: info@sherex.com
www.sherex.com
Phone: 866-474-3739
Fax: 716-875-0358

TITLE:
SMALL FLANGE OPEN END

SIZE	DWG. NO.	REV
A	CAK2-2528-260	B

SCALE: 2:1 | WEIGHT:.0047 kg | SHEET 1 OF 1

5 4 3 2 1