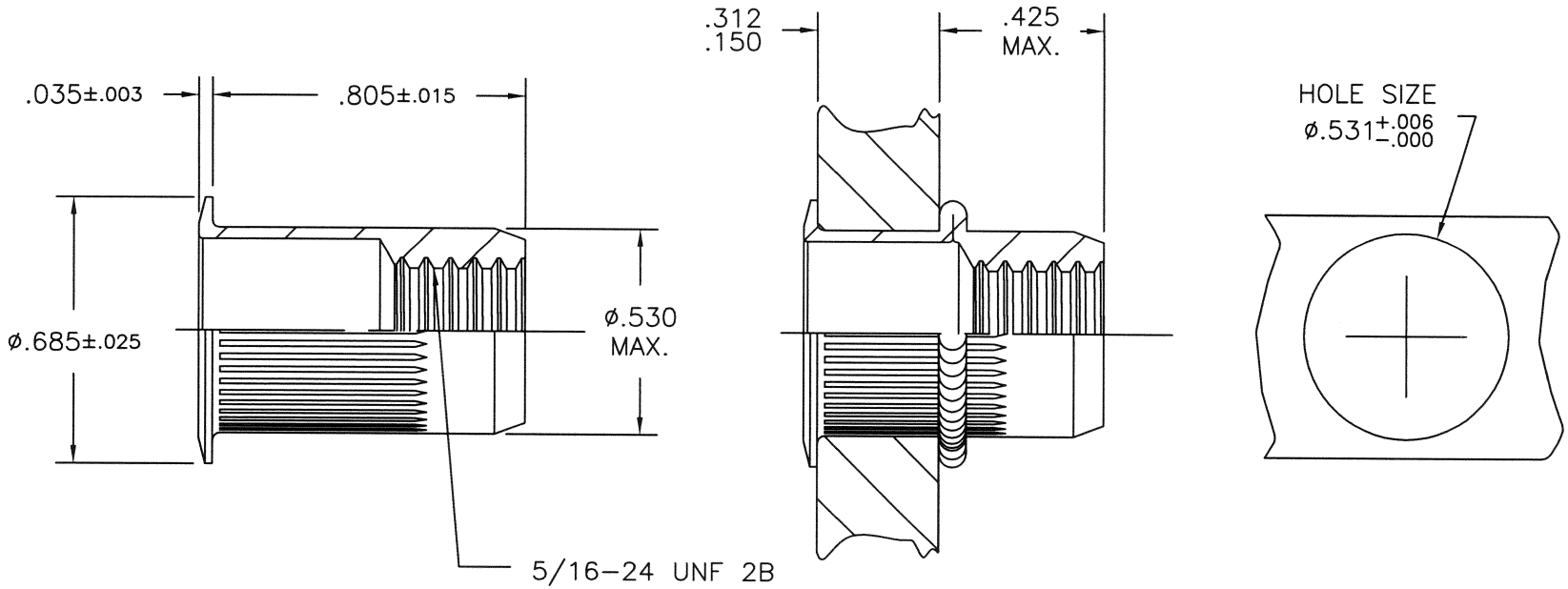

2 X SCALE

CAL Specifications

Material: Steel 1008/1010
Stainless Steel 302
Aluminum 5056

Finish: Zinc Plated–Yellow Dichromate per ASTM B633 Fe/Zn 8, Type II

Part Number Description

CAL2–3124–312

CAL	2	3124	312	(–)
Product Style	Material	Thread Size	Grip Range	Empty–Open End
Large Flange	1–Stainless Steel			B–Closed End
Knurled Body	2–Steel			
Thin Wall Series	3–Aluminum			

THIS DRAWING, AND THE INFORMATION CONTAINED HERIN, ARE THE PROPERTY OF SHEREX FASTENING SOLUTIONS AND ARE NOT TO BE USED IN ANY MANNER DETRIMENTAL TO THE INTEREST OF THE COMPANY.

NOTE: SHEREX RESERVES THE RIGHT TO REVISE PART/DRAWING WITHOUT NOTICE.

REV	DESCRIPTION	ECN	DATE

SHEREX FASTENING SOLUTIONS
1400 COMMERCE PKWY.
LANCASTER, NY 14086 USA

DRAWN BY:	DATE:	SCALE:	TITLE:
TOO	5/23/05	1:1	CAL STYLE RIVET NUT
CHECK'D BY: TOO	DATE: 5/23/05		
APPR'D BY: AJP	DATE: 5/23/05		

SHEREX FASTENING SOLUTIONS

E–mail: info@sherex.com
www.sherex.com
Phone: 866–474–3739
Fax: 716–681–0270

DRAWING NO.

CAL2–3124–312