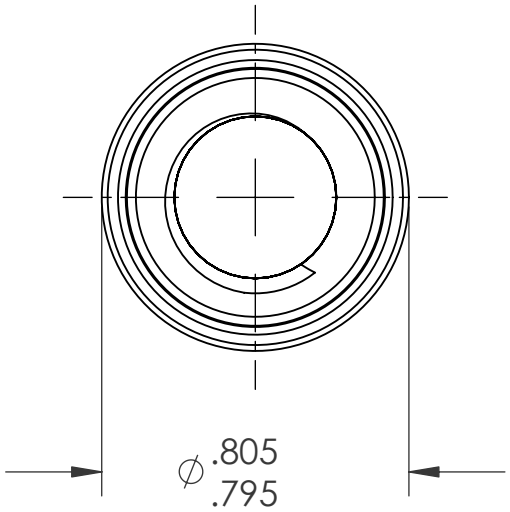

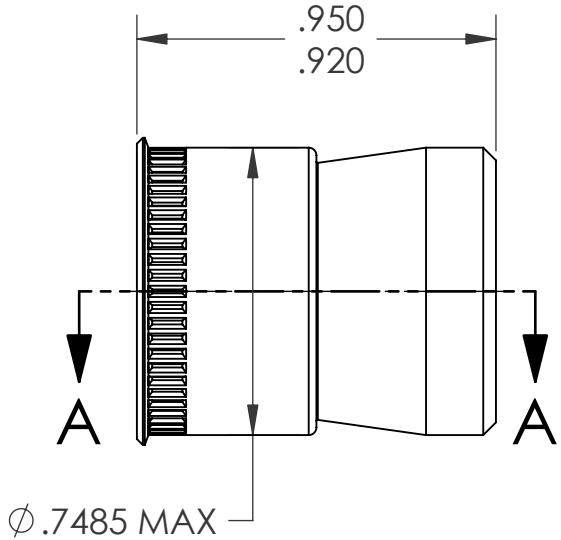

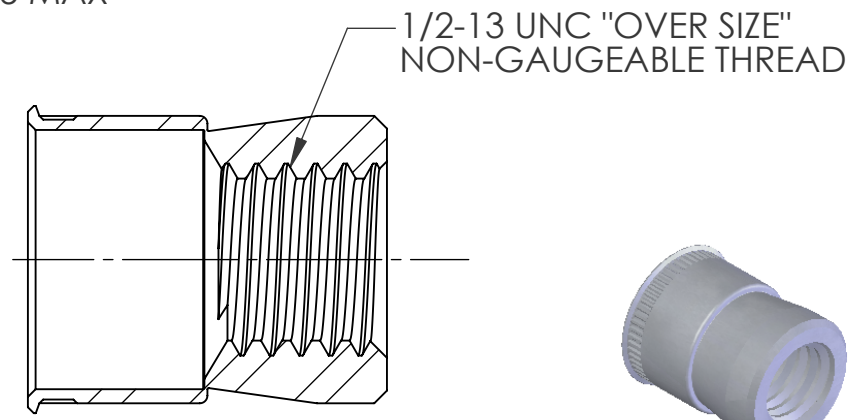

SECTION A-A

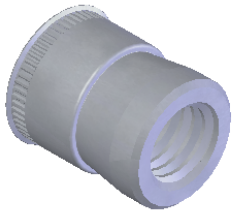

NOTE:
1. GRIP RANGE: .030 MIN.
2. HOLE SIZE:
   1. .030 - .090 MT'L THICK.: .7500 AFTER ALL APPLIED FINISHES.
   2. .091 - .124 MT'L THICK.: .7656 AFTER ALL APPLIED FINISHES.
   3. .125 - .186 MT'L THICK.: .7810 AFTER ALL APPLIED FINISHES.
   4. .186 - OVER MT'L THICK.: .7970 AFTER ALL APPLIED FINISHES.
3. INSTALLED LENGTH: N/A
4. LUBRICATION: NONE
5. INSTALLATION TOOL: SSG 808 SPIN SPIN

PROPRIETARY AND CONFIDENTIAL

THIS DRAWING, AND THE INFORMATION CONTAINED HERIN, ARE THE PROPERTY OF SHEREX AND ARE NOT TO BE USED IN ANY MANNER DETRIMENT TO THE INTEREST OF THE COMPANY.

SHEREX SOLUTIONS RESERVES THE RIGHT TO REVISE PART/DRAWING WITHOUT NOTICE.

NEXT ASSY	USED ON
APPLICATION	

UNLESS OTHERWISE SPECIFIED:

DIMENSIONS ARE IN INCHES
TOLERANCES:
ANGULAR: MACH ± 1 BEND ±1
TWO PLACE DECIMAL ±.01
THREE PLACE DECIMAL ±.002

INTERPRET GEOMETRIC TOLERANCING PER: ASME Y14.5M-1994

MATERIAL
12L14

FINISH
CADMIUM PER QQ-P-416 TYPE I CLASS 3

DO NOT SCALE DRAWING

	NAME	DATE
DRAWN	JLA	8/11/03
CHECKED		
ENG APPR.	JLA	8/11/03
MFG APPR.	AJP	8/11/03
Q.A.		

COMMENTS:

E-mail: info@sherex.com
www.sherex.com
Phone: 866-474-3739
Fax: 716-875-0358

TITLE:

CADMIUM FREE
SMALL FLANGE SWAGING

SIZE	DWG. NO.	REV
A	CAT2-5013	A

SCALE: 2:1 | WEIGHT:.0195 kg | SHEET 1 OF 1

5 4 3 2 1