REVISIONS				
REV.	DESCRIPTION	DATE	ECN	INITIAL
A	INITIAL RELEASE	06/18/2025	4672	MRA

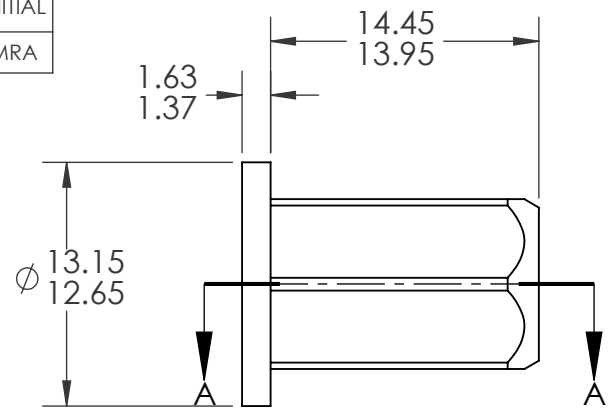

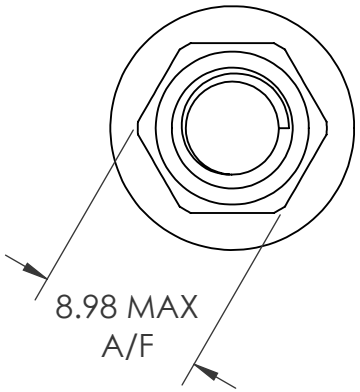

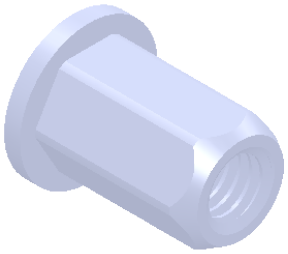

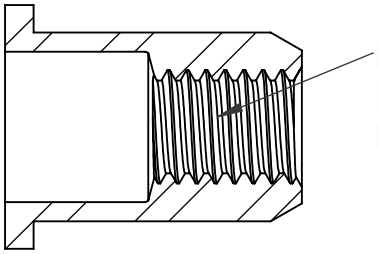

SECTION A-A
SCALE 2.5 : 1

NOTE:
1. GRIP RANGE: 0.5 - 3.0
2. HOLE SIZE: 9.0+0.1/-0.0 A/F AFTER ALL APPLIED FINISHES.
3. INSTALLED LENGTH: 10.0 REF.
4. LUBRICATION: NONE
5. INSTALLATION TOOL: FLEX 5P/5S SPIN PULL

CUSTOMER APPROVAL:

DATE:

PROPRIETARY AND CONFIDENTIAL

THIS DRAWING, AND THE INFORMATION CONTAINED HERIN, ARE THE PROPERTY OF SHEREX AND ARE NOT TO BE USED IN ANY MANNER DETRIMENT TO THE INTEREST OF THE COMPANY.

SHEREX SOLUTIONS RESERVES THE RIGHT TO REVISE PART/DRAWING WITHOUT NOTICE.

NEXT ASSY	USED ON
APPLICATION	

UNLESS OTHERWISE SPECIFIED:

DIMENSIONS ARE IN INCHES
TOLERANCES:
ANGULAR: MACH ± 1 BEND ±1
TWO PLACE DECIMAL ±.01
THREE PLACE DECIMAL ±.005

INTERPRET GEOMETRIC TOLERANCING PER: ASME Y14.5M-1994

MATERIAL
1010 STEEL

FINISH
ZINC WITH CLEAR TRIVALENT CHROMATE PER SFS-01-001, SC4

DO NOT SCALE DRAWING

	NAME	DATE
DRAWN	MRA	6/18/25
CHECKED		
ENG APPR.	JVK	6/18/25
MFG APPR.		
Q.A.		

COMMENTS:
E-mail: info@sherex.com
www.sherex.com
Phone: 866-474-3739
Fax: 716-875-0358

TITLE:
LARGE FLANGE FULL HEX

SIZE	DWG. NO.	REV
A	CFLM2-610-3.0	A

SCALE: 2:1 WEIGHT: SHEET 1 OF 1

5 4 3 2 1

SOLIDWORKS Educational Product. For Instructional Use Only.