REVISIONS				
REV.	DESCRIPTION	DATE	ECN	INITIAL
A	INITIAL RELEASE	6/3/2025	4665	EAK

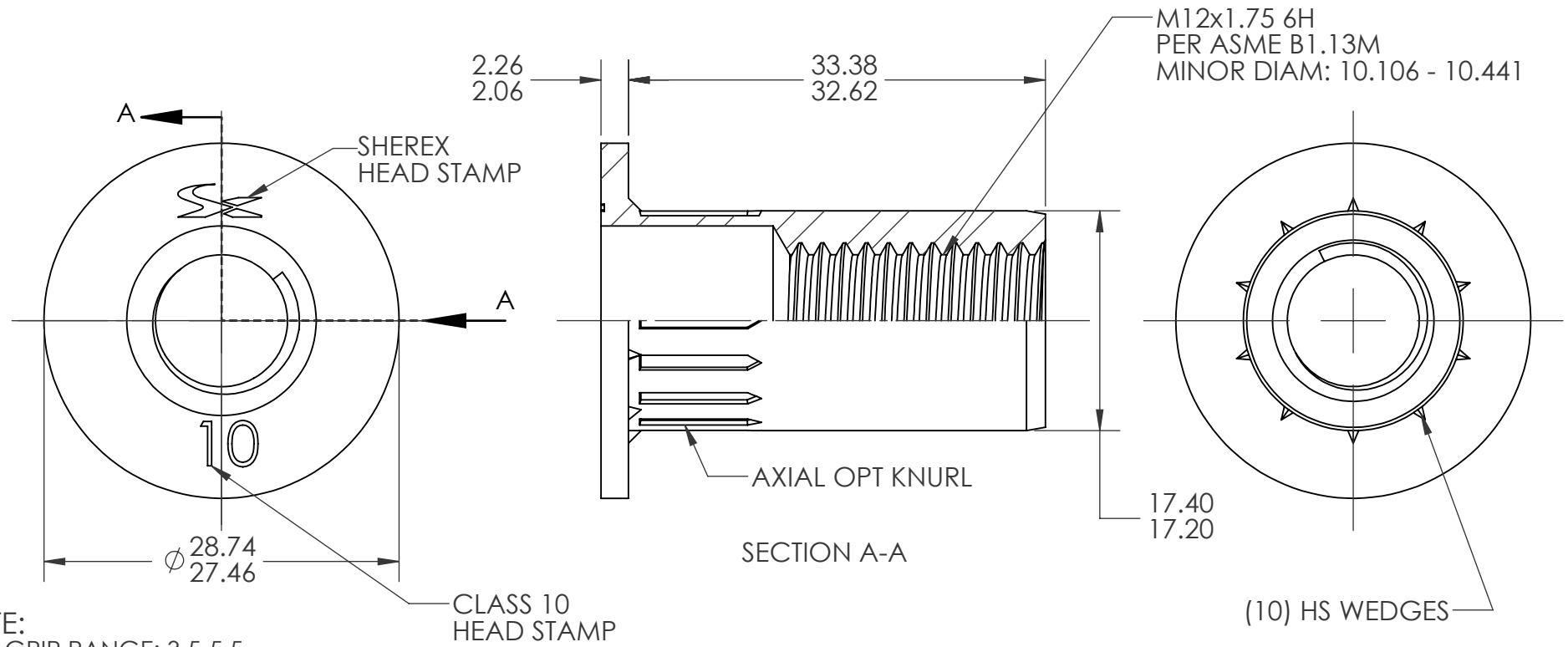

NOTE:
1. GRIP RANGE: 3.5-5.5
2. HOLE SIZE: 17.45 +.15/-.00 AFTER ALL APPLIED FINISHES.
3. INSTALLED LENGTH:
4. LUBRICATION: NONE
5. INSTALLATION TOOL: SPIN PULL
6. THREADS MEET CLASS 10 PROOF LOAD PER ISO 898-2 - 88.5 kN

PROPRIETARY AND CONFIDENTIAL

THIS DRAWING, AND THE INFORMATION CONTAINED HERIN, ARE THE PROPERTY OF SHEREX AND ARE NOT TO BE USED IN ANY MANNER DETRIMENTTO THE INTEREST OF THE COMPANY.

SHEREX SOLUTIONS RESERVES THE RIGHT TO REVISE PART/DRAWING WITHOUT NOTICE.

UNLESS OTHERWISE SPECIFIED, ALL SPECIFICATIONS REFERENCED ON THIS DRAWING WILL PERTAIN TO THE MOST RECENT AND ACTIVE REVISION.

NEXT ASSY	USED ON
APPLICATION	

UNLESS OTHERWISE SPECIFIED:

DIMENSIONS ARE IN MILLIMETERS
TOLERANCES:
ANGULAR: MACH ± 1 BEND ±1
ONE PLACE DECIMAL ±0.3
TWO PLACE DECIMAL ±0.08

INTERPRET GEOMETRIC TOLERANCING PER: ASME Y14.5M-1994

MATERIAL
10B21 STEEL

FINISH ZINC PLATE CLEAR TRIVALENT CHROMATE PER SHEREX SFS-01-001, SC1

DO NOT SCALE DRAWING

	NAME	DATE
DRAWN	EAK	6/3/25
CHECKED		
ENG APPR.	JVK	6/3/25
MFG APPR.		
Q.A.		

COMMENTS:
E-mail: info@sherex.com
www.sherex.com
Phone: 866-474-3739
Fax: 716-875-0358

TITLE:
HIGH STRENGTH ROUND BODY M12

SIZE	DWG. NO.	REV
A	RHS2-12175-5.5	A

SCALE: 2:1 WEIGHT: .035KG SHEET 1 OF 1