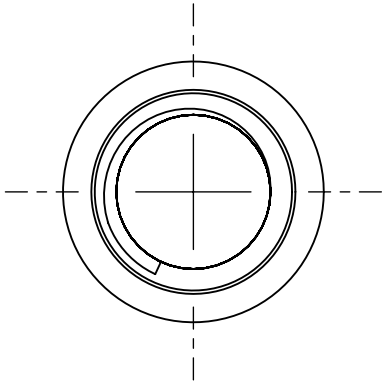

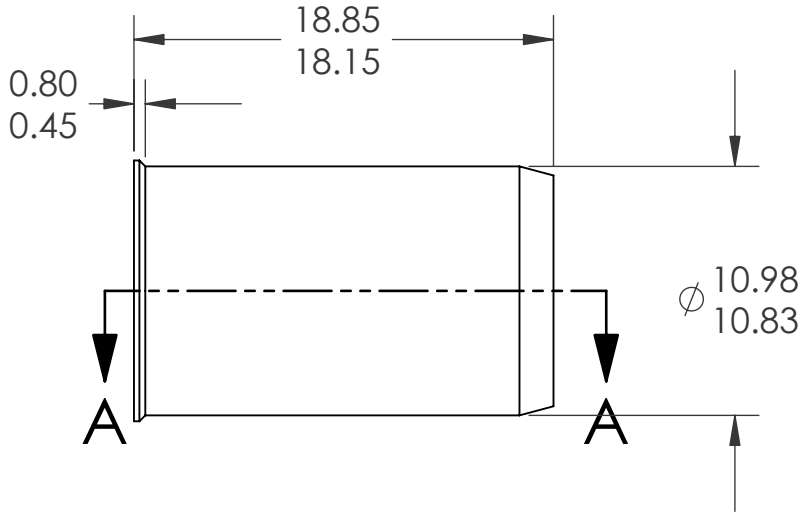

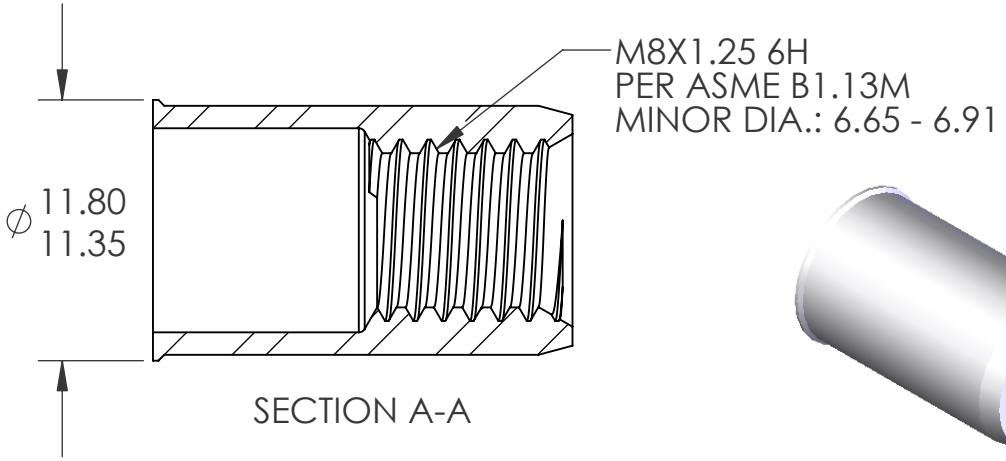

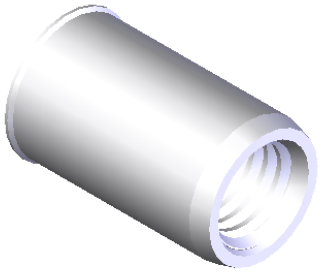

NOTE:
1. GRIP RANGE: 3.0 - 5.5
2. HOLE SIZE: 11.0 +0.1/-0.0 AFTER ALL APPLIED FINISHES.
3. INSTALLED LENGTH: N/A
4. INSTALLED THREAD DEPTH:
5. LUBRICATION: NONE
6. INSTALLATION TOOL: MS 50 SPIN PULL

UNLESS OTHERWISE SPECIFIED:		NAME	DATE	
DIMENSIONS ARE IN MILIMETERS TOLERANCES: ANGULAR: MACH ± 1 BEND ±1 ONE PLACE DECIMAL ±0.10 TWO PLACE DECIMAL ±0.05	DRAWN	JVK	3/11/08	TITLE:
	CHECKED			LOW PROFILE HEAD OPEN END
INTERPRET GEOMETRIC TOLERANCING PER: ASME Y14.5M-1994	ENG APPR.	JVK	3/11/08	
	MFG APPR.	TB	8/7/08	
MATERIAL: 304 STAINLESS	Q.A.			
FINISH: PASSIVATE	COMMENTS: E-mail: info@sherex.com www.sherex.com Phone: 866-474-3739 Fax: 716-875-0358			SIZE A / DWG. NO. TU-SSM8UKO55 / REV A
DO NOT SCALE DRAWING				SCALE: 2:1 / WEIGHT:.0055 kg / SHEET 1 OF 1

NEXT ASSY	USED ON
APPLICATION	

PROPRIETARY AND CONFIDENTIAL

THIS DRAWING, AND THE INFORMATION CONTAINED HERIN, ARE THE PROPERTY OF SHEREX AND ARE NOT TO BE USED IN ANY MANNER DETRIMENT TO THE INTEREST OF THE COMPANY.

SHEREX SOLUTIONS RESERVES THE RIGHT TO REVISE PART/DRAWING WITHOUT NOTICE.

5 4 3 2 1